236-000013

ASSEMBLY INSTRUCTIONS

A	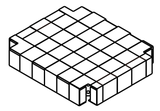	1PC
B	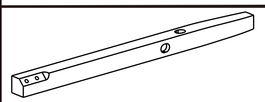	2PCS
C	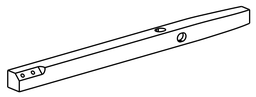	2PCS
D	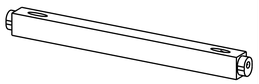	2PCS
E	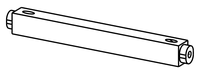	2PCS
F	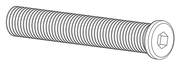 M8*60	8PCS
G	 M6*40	8PCS
H	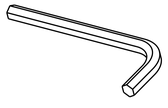	1PC
I	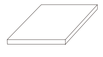	4PCS
J	 8*22*2	8PCS

Step1

A x 1
B x 2
C x 2
F x 8
H x 1
J x 8

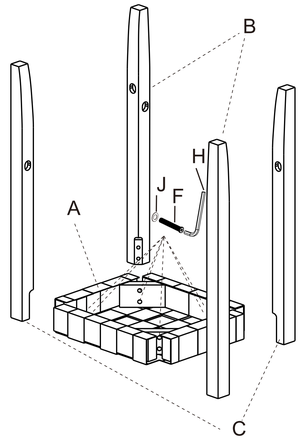

(screw tightened 80%)

Step2

D x 2
G x 4
H x 1

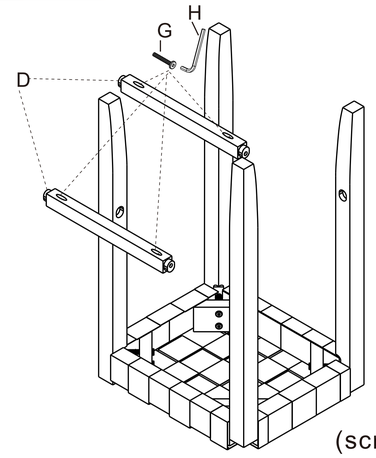

(screw tightened 80%)

Step3

Ex 2
G x 4
H x 1

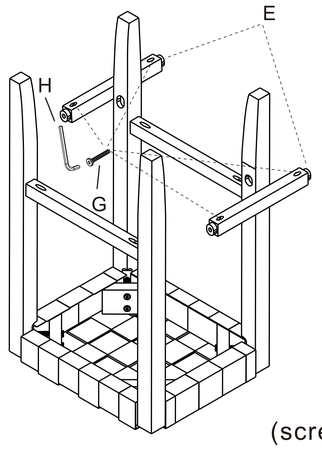

(screw tightened 80%)

Step4

H x 1
I x 4

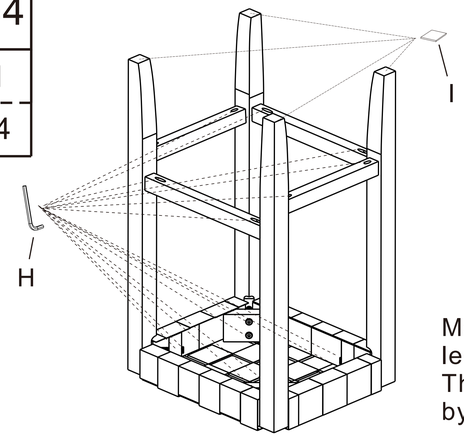

Make sure the stool is leveled on the ground
Then tighten all the screws by 100%

Step5

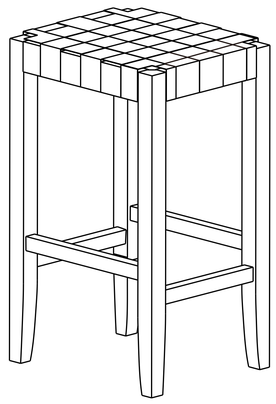

WARNING: *DO NOT STAND ON THE CHAIR *THIS CHAIR IS DESIGNED TO SEAT ONE PERSON O LY *DO NOT USE THE CHAIR UNLESS ALL THE BOLTS AND SCREWS ARE FINALLY TIGHTENED
***AT LEAST EVERY FOUR MONTHS, PLEASE CHECK ALL BOLTS D SCREWS TO MAKE SURE THEY ARE SECURELY TIGHTENED**
***IF ANY PARTS ARE MISSING, BROKEN, DAMAGED, OR WORN, STO USING THIS PRODUCT IMMEDIATELY UNTIL REPAIRS ARE MADE**
***FAILURE TO FOLLOW THESE WARNIN S COULD RESULT IN SERIOUS INJURY**